LX60

Quick Facts

Optimized Excellence

An unshakable commitment to excellence and an unchanging focus on providing genuine value — those are the roots of our new LX60 Alternator. Built on the reliability of our acclaimed L-60 and the superior efficiency of our BC460-H, the LX60 combines robust 60A output and unmatched durability in a compact 7.1 lb. frame. With the features that you would expect from a B&C Alternator – heavy-duty sealed ball bearings, two internal cooling fans, and a precision dynamically-balanced rotor – the LX60 is made to exacting tolerances, with three attachment points for stable mounting, and configured for external aircraft-style alternator control with over-voltage protection and low-voltage warning. Suited for 14V or 28V applications using our LR3D-14 or LS-1A Controllers, the LX60 includes mounting brackets for either Wide-deck or Narrow-deck Lycoming engines, attachment hardware, belt tension arm and belt, and a pre-wired field connector assembly.

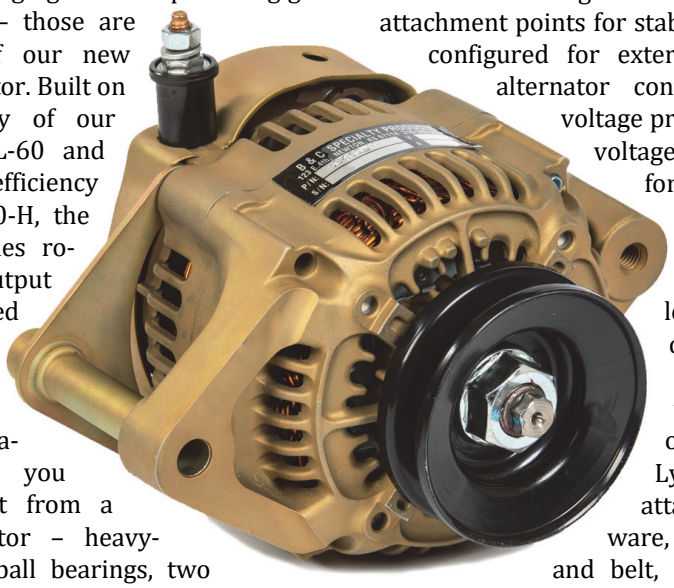

Doing the Math

So when is bigger not better?

When every pound requires an expenditure of finite resources.

Granted, a 70 or 100 amp alternator might sound impressive on the ground. But if you don't actually need that sort of output to complete a typical flight, why "spend" the finite resource (useful load) that such an alternator consumes? Bragging rights don't make an airplane fly . . . or make electricity.

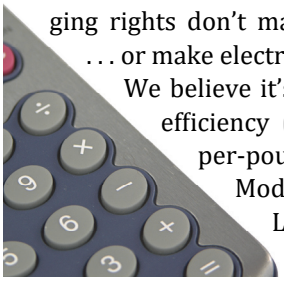

We believe it's wiser to focus on efficiency (maximum output-per-pound) and reliability. Modern avionics and LED lights are making aircraft electrical systems more frugal than ever. And many aircraft are more electrically dependent today than ever. As a result, what is needed — really needed — is not so much a bigger alternator as a better alternator; one with quality construction AND efficiency. The LX60 is just that.

If you've never performed a true "load analysis" for your electrical system, we would urge you: take the time and do the math. Your effort will be well-rewarded with a more realistic sense of the actual needs and capabilities of your aircraft. In fact, we think you might just find that the LX60 is the solution you're looking for — a quality, "right-sized" alternator that is better … without being bigger.

Features

- Externally Regulated
- Precision Dynamically Balanced Rotor
- Two Internal Cooling Fans
- Heavy Duty Sealed Ball Bearings
- Three Attachment Points, with a "Thru-Bolt"-type Pivot Arm
- Bracket Systems for Wide-Deck or Narrow-Deck Engines
- Alodine Coating for Corrosion Protection
- Includes Bracket, Belt Tension Arm, Attachment Hardware, Belt, and Pre-wired Field Connector Assembly
- Weighs only 7.1 lbs.

BandC.com

Pricing

LX60 (Homebuilt), *with Boss-Mount or Case-Mount Installation Kit*	$649

Also of Interest

LR3D-14 Controller, 14V (Homebuilt)	$230
LS-1A Controller, 28V (Homebuilt)	$230

LX60 DIMENSIONS

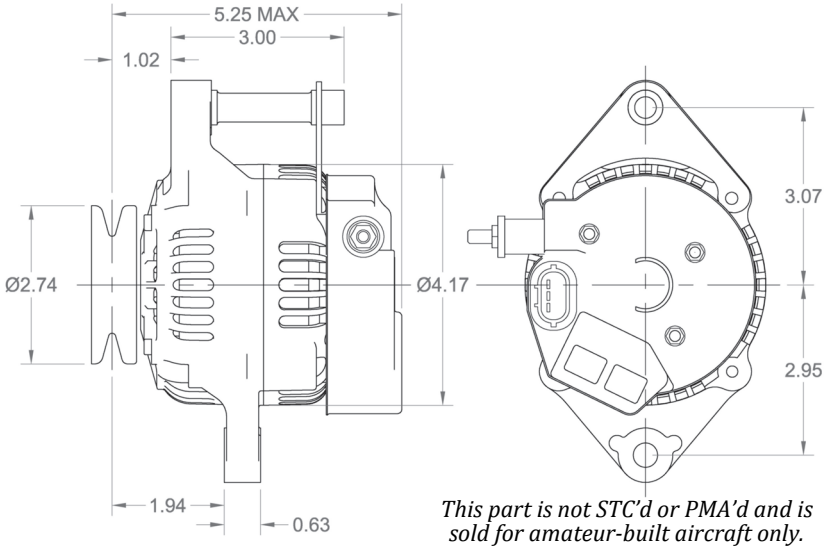

This part is not STC'd or PMA'd and is sold for amateur-built aircraft only.

ALTERNATOR PERFORMANCE DATA		
ALT RPM	OUTPUT AMPS 14v (HOT)	OUTPUT AMPS 28v (HOT)
2500	32.6	12.5
3000	37.6	23.9
3500	40.2	34.1
4000	42.8	39.6
4500	45.4	43.8
5000	48.3	45.3
6000	49.5	51.8
7000	51.1	56.3
8000	53.6	60.5
9000	56.2	57.2
10000	59.1	61.5

INSTALLATION KITS FOR THE LX60

We want your installation to be as hassle-free and reliable as possible. That's why every LX60 Alternator includes a pre-wired field connector assembly, mounting bracket, belt tension arm, attachment hardware, and a high-performance belt.

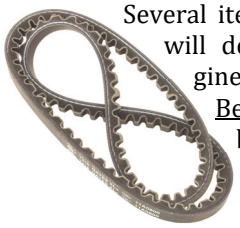

Several items in this package will depend on your engine configuration —

Belts: Multiple sizes of belts are available with the LX60. The best fit for your application can be determined by measuring the outside diameter of the pulley on the ring gear support assembly (a.k.a. "flywheel"). One of two pulley sizes is generally possible: either 7 ½" or 9 ¾".

Brackets: Many Lycoming engine cases produced prior to the mid-1960's lack provision for alternator mounting. For these applications, a special alternator bracket that attaches to the front two engine case half bolts is required; hence the term "Case Mount" bracket. *Note: this bracket is designed to connect to the lug on the inboard side of the starter for lateral support — we will need to know which starter your engine is using to supply the correct bracket.*

Engine cases manufactured since the mid-1960's have a machined pad (or "Boss") for alternator mounting. This area is adjacent to the pad for starter mounting, and has two threaded holes for bolts to secure a U-shaped alternator bracket — also known as a "Boss Mount" bracket.

THE DETAILS BEHIND EXTRAORDINARY VALUE

What distinguishes a B&C Alternator, such as the LX60, from other similar-looking alternators?

In a word: details.

While it may not be immediately apparent, every B&C Alternator goes through a series of detailed operations that insure its durability.

Balancing is a case-in-point. As with our other wound-field alternators, the LX60's rotor is dynamically balanced on our computerized, two-plane balancing machine to precision tolerances. This process is time-consuming and resource-intensive. In fact, other manufacturers may find it "cost prohibitive" and not even bother.

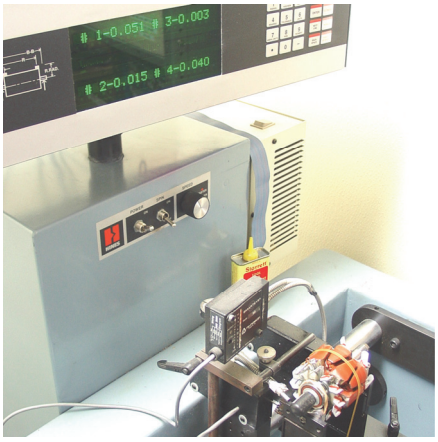

But we think the outcome is well worth the added manufacturing cost. A precision alternator operates with less wear and vibration over time, resulting in greater reliability. That means more time in service . . . and fewer failures.

So details do add up — they combine to create an alternator with superb efficiency, and extraordinary value.