SYMBOL	REVISION	DRAWN	APPRVD
B	REVISED FOR NEW ENCLOSURE	TH	10/10/02
C	REV FOR NEW ENCLOSURE AND INCREASED RATINGS	TH	4/14/04
D	BLUE WAS WHITE. ADDED NOTE 5.DELETED CONNECTOR	TH	2/11/08

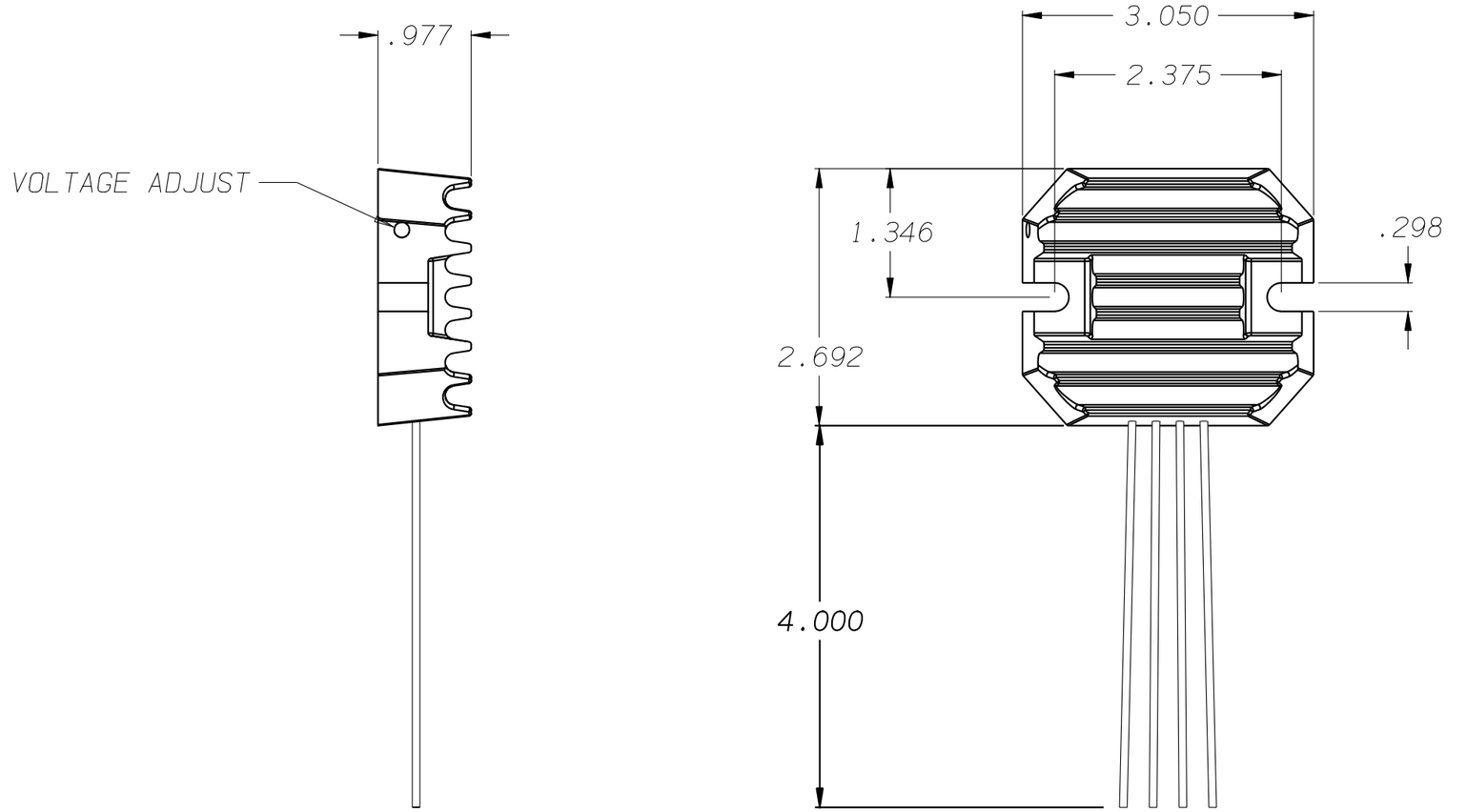

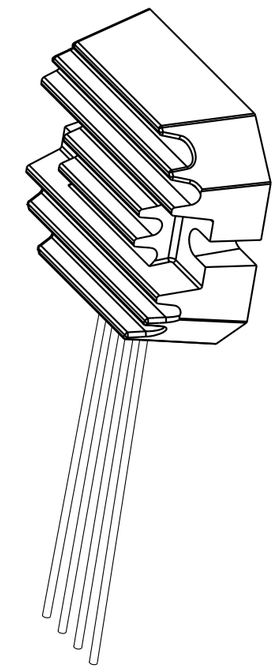

NOTES:

1. -1 IS 14 VOLTS NOMINAL (PMR1C-14)
   -2 IS 28 VOLTS NOMINAL (PMR1C-28)
2. CONNECTIONS: BLUE - A.C. INPUT FROM ALTERNATOR
   BLUE - A.C. INPUT FROM ALTERNATOR
   RED - D.C. OUTPUT (+)
   BLACK - D.C. OUTPUT (-)
3. MAXIMUM CASE TEMPERATURE 175°F
4. MAXIMUM CONTINUOUS CURRENT OUTPUT 12 AMPS
5. MAKE CONNECTIONS WITH BUTT SPLICES OR SOLDER AND SHRINK TUBE.

ITEM	
USED ON	-1

UNLESS OTHERWISE SPECIFIED

DIMENSIONS ARE IN INCHES
TOLERANCES ARE:
DECIMAL 0.XX = ±0.03
DECIMAL 0.XXX = ±0.005
ANGLES = ±0.5 DEGREES

	NAME	DATE
ENGINEER	TH	1/23/99
DRAWN	TH	
CHECKED		
PROJECT		

B & C Specialty Products
P.O. Box B, Newton, Kansas 67114

TITLE PM REGULATOR, SINGLE PHASE, 14 OR 28 VOLT

DRAWING NO. BC219

REVISION D

DATE 2/11/08

SCALE FULL JOB NO.

PAGE OF